A Fresh Look at the Method of Archimedes
Author(s): Tom M. Apostol and Mamikon A. Mnatsakanian
Source: *The American Mathematical Monthly*, Vol. 111, No. 6 (Jun. - Jul., 2004), pp. 496-508
Published by: Mathematical Association of America
Stable URL: http://www.jstor.org/stable/4145068
Accessed: 12/10/2008 16:55

Your use of the JSTOR archive indicates your acceptance of JSTOR's Terms and Conditions of Use, available at http://www.jstor.org/page/info/about/policies/terms.jsp. JSTOR's Terms and Conditions of Use provides, in part, that unless you have obtained prior permission, you may not download an entire issue of a journal or multiple copies of articles, and you may use content in the JSTOR archive only for your personal, non-commercial use.

Please contact the publisher regarding any further use of this work. Publisher contact information may be obtained at http://www.jstor.org/action/showPublisher?publisherCode=maa.

Each copy of any part of a JSTOR transmission must contain the same copyright notice that appears on the screen or printed page of such transmission.

JSTOR is a not-for-profit organization founded in 1995 to build trusted digital archives for scholarship. We work with the scholarly community to preserve their work and the materials they rely upon, and to build a common research platform that promotes the discovery and use of these resources. For more information about JSTOR, please contact support@jstor.org.

Mathematical Association of America is collaborating with JSTOR to digitize, preserve and extend access to *The American Mathematical Monthly*.

http://www.jstor.org

A Fresh Look at the Method of Archimedes

Tom M. Apostol and Mamikon A. Mnatsakanian

1. INTRODUCTION. A spectacular landmark in the history of mathematics was the discovery by Archimedes (287–212 B.C.) that the volume of a solid sphere is two-thirds the volume of the smallest cylinder that surrounds it, and that the surface area of the sphere is also two-thirds the total surface area of the same cylinder. Archimedes was so excited by this discovery that he wanted a sphere and its circumscribing cylinder engraved on his tombstone, even though there were many other great accomplishments for which he would be forever remembered. He made this particular discovery by balancing slices of a sphere and cone against slices of a larger cylinder, using centroids and the principle of the lever, which were also among his remarkable discoveries.

The volume ratio for the sphere and cylinder can be derived from first principles without using levers and centroids (see [**5**]). This simpler and more natural method, presented in sections 2 and 3, paves the way for generalizations. Section 4 introduces a family of solids circumscribing a sphere. Cross sections of each solid cut by planes parallel to the equatorial plane are disks bounded by similar n-gons that circumscribe the circular cross sections of the sphere. We call these solids *Archimedean globes* in honor of Archimedes, who treated the case $n = 4$. The sphere is a limiting case, $n \to \infty$. Each globe is analyzed by dividing it into wedges with two planar faces and one semicircular cylindrical face. In fact, Archimedes discussed (both mechanically and geometrically) volumes of wedges of this type. Figure 1 shows the top view of examples of globes with $n = 3, 4, 6$, and the limiting sphere.

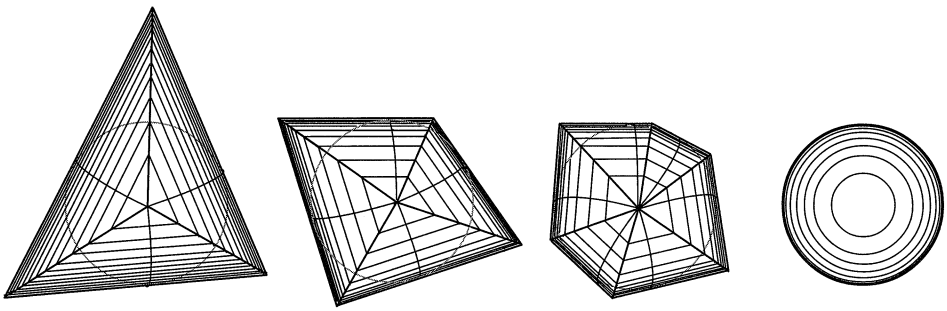

Figure 1. Top view of Archimedean globes showing equators with $n = 3, 4, 6$, and ∞.

Like the sphere, each Archimedean globe has both volume and surface area two-thirds that of its circumscribing prismatic container. Section 5 treats the volume of an Archimedean shell, the region between two concentric Archimedean globes. The results are applied in section 6 to find the surface area of an Archimedean globe. A common thread in all this work is the reduction of a problem to a simpler problem. As surprising consequences of these new results, we also obtain: other families of incongruent solids having both equal volume and equal total surface area (section 7); the quadrature of the sine curve (section 8); and the centroid of any slice of a spherical surface (section 9).

2. VOLUME OF A SPHERE. We present first a geometric derivation of the volume relation between a sphere and its circumscribing cylinder. By symmetry, it suffices to consider a hemisphere and its circumscribing cylinder (whose radius is equal to its altitude), as shown in Figure 2. A cone with the same altitude is drilled out of the center of the cylinder. The cone's volume is one-third that of the cylinder, so the solid that remains is a *punctured cylinder* with volume two-thirds that of the cylinder. To show that the punctured cylinder has the same volume as the hemisphere, slice both solids by an arbitrary horizontal plane parallel to the base and note that corresponding cross sections have equal areas. Then invoke Cavalieri's principle, which states that two solids have equal volume if all cross sections taken at the same height have equal areas.

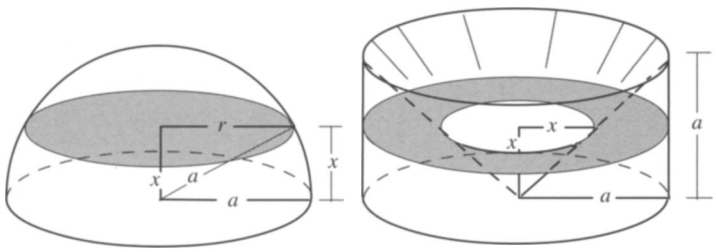

Figure 2. The cross sections of the sphere and punctured cylinder have equal areas.

To verify equality of areas, assume that the sphere has radius a and that the cutting plane is at distance x from the center. It cuts a circular cross section of radius r, say, with area πr^2. The corresponding cross section of the punctured cylinder is an annulus with outer radius a and inner radius x (because the altitude and radius of the cylinder are equal), so its area is $\pi a^2 - \pi x^2$. But r and x are the legs of a right triangle with hypotenuse a, hence, by the Pythagorean Theorem, $\pi r^2 = \pi a^2 - \pi x^2$. In other words, corresponding cross sections of the two solids have equal areas. Therefore, any two planes parallel to the base cut off solids that have equal volumes. Thus, we have proved the following theorem, illustrated in Figure 3.

Theorem 1. *Any two planes parallel to the base cut the sphere and the punctured circumscribing cylinder in solid slices of equal volumes.*

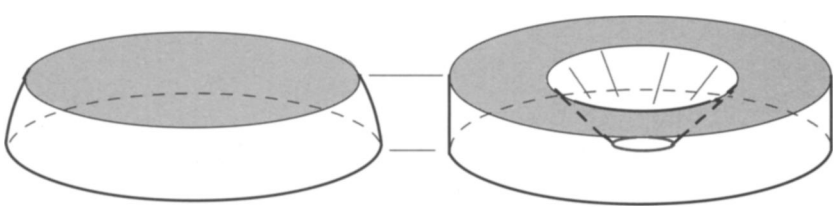

Figure 3. Two parallel planes cut the sphere and punctured cylinder in solid slices of equal volumes.

Corollary 2 (Archimedes). *The volume of a sphere is two-thirds the volume of its circumscribing cylinder.*

Throughout this paper we express the main theorems in the style of Archimedes, that is, by relating the volume (or surface area) of one solid to that of a simpler one. Explicit formulas in terms of dimensions of the figures can be deduced from these theorems.

EXAMPLES (Formulas for volumes). If a is the radius of the hemisphere in Figure 2, the volume of the punctured cylinder is two-thirds the area of its base times its altitude, or $2\pi a^3/3$, which is also the volume of the hemisphere. The entire sphere has volume $4\pi a^3/3$.

Theorem 1 also gives the volume of a spherical segment, the portion of a sphere of radius a above a plane at distance $R \leq a$ parallel to the equatorial plane. The corresponding punctured circumscribing cylinder has altitude R, from which a cone of volume $\pi R^3/3$ has been removed. The difference $\pi a^2 R - \pi R^3/3$ is the volume of the corresponding portion of the sphere. Subtracting this from the volume of the hemisphere we get

$$\tfrac{2}{3}\pi a^3 + \tfrac{1}{3}\pi R^3 - \pi a^2 R$$

as the volume of the spherical segment. This can also be written as $\pi h^2(3a - h)/3$, where $h = a - R$ is the height of the segment. Archimedes derived this by another method, but expressed it as the ratio $(a + 2R)/(2R)$ times the volume of a cone of altitude h inscribed in the spherical segment.

3. VOLUME OF A SPHERICAL SHELL. A spherical shell is the region between two concentric spheres. As expected, its volume is the difference of the volumes of the two spheres. A somewhat unexpected result is obtained by taking a cross section of the spherical shell by a plane that cuts both spheres. Suppose the inner and outer radii are r and a, respectively, and that the cutting plane is at distance x from the center. We assume that $0 \leq x \leq r$, so the plane cuts both spheres. The cross section is an annular ring (Figure 4a) of outer radius s and inner radius t, say, with area $\pi s^2 - \pi t^2$. The unexpected result is that this area is independent of x: it's the same for all cutting planes.

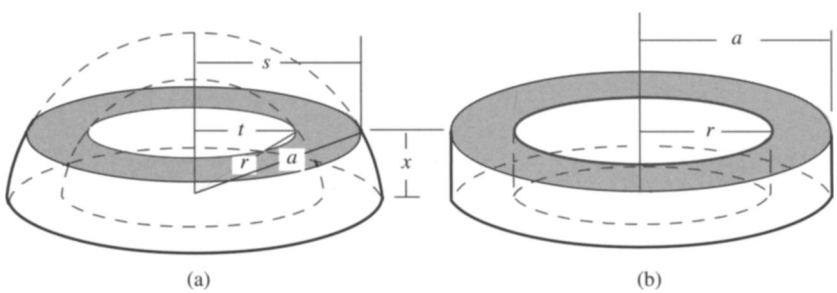

Figure 4. The cross-sectional area of a spherical shell cut by a plane that cuts both spheres is constant.

To see why, apply the Pythagorean Theorem twice, once to a right triangle with hypotenuse a, and again to a right triangle with hypotenuse r (see Figure 4a). This gives

$$s^2 = a^2 - x^2, \qquad t^2 = r^2 - x^2$$

hence $\pi(s^2 - t^2) = \pi(a^2 - r^2)$. Therefore each annular ring has area $\pi a^2 - \pi r^2$, which is independent of x. Now observe that $\pi a^2 - \pi r^2$ is also the cross-sectional area of the cylindrical shell between two coaxial cylinders with radii r and a, as shown in Figure 4b. Therefore, by Cavalieri's principle we have the following result:

Theorem 3. *Any slice of a spherical shell between two horizontal planes that cut both spheres has volume equal to the corresponding slice of a cylindrical shell cut by the same planes.*

The volume of the cylindrical shell is the area of its base times its altitude. In terms of the radii, this volume is $\pi(a^2 - r^2)h$, where h is the distance between the parallel cutting planes. In other words, for given radii, the volume is proportional to the distance between the parallel cutting planes.

More generally, the portion of a spherical shell between any two horizontal planes has volume equal to the corresponding portion of the punctured cylindrical shell. By considering very thin spherical shells we can use this result to deduce the surface area of a sphere. We prefer to deduce this later in section 6, where we explore surface areas of general Archimedean globes.

In the next five sections we do not assume a knowledge of the volume or surface area of a sphere; we realize they could be used to simplify many of our proofs by comparing cross-sectional areas of spheres and circumscribed globes. Our purpose is to present a sequence of elementary results that could have been discovered by Archimedes in his quest for the volume and surface area of a sphere had he tried to simplify his geometric analysis of wedges.

4. VOLUME OF AN ARCHIMEDEAN GLOBE. For convenience in drawing figures, we define first an *Archimedean dome* circumscribing a hemisphere as in Figure 5a. The base is an *arbitrary* polygon circumscribing the equator. Each cross section of the dome by a plane parallel to the base is a similar polygon circumscribing the circular cross section of the sphere and having the same orientation as the base relative to the polar axis through the center. The union of a dome with its equatorial mirror image creates an *Archimedean globe*.

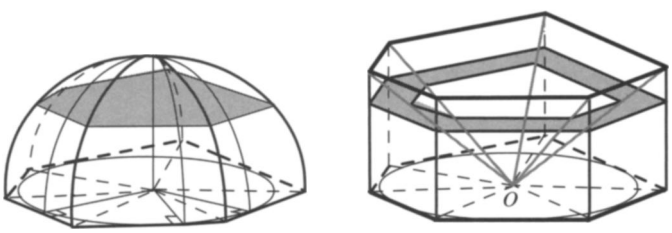

(a) (b)

Figure 5. An Archimedean dome whose volume is equal to that of the punctured circumscribing prism.

Incidentally, globes representing the Earth are often made this way using a regular dodecagon as the equatorial base. Astronomical observatories use Archimedean domes to cover their telescopes.

Figure 5b shows a circumscribing prism of the dome with the same polygonal base and the same altitude, from which a pyramid with congruent base and vertex O has been removed. The pyramid has volume one-third that of the prism, so the solid that

remains has volume two-thirds that of the prism. Each horizontal cross section of the punctured prism is a polygonal ring bounded by two polygons similar to the base. We will show that the area of this ring is equal to the area of the corresponding cross section of the dome, which implies that the dome and the punctured prism have equal volumes.

To show equality of cross-sectional areas, divide the dome into wedges of the type shown in Figure 6a, with a right triangular base of altitude a, a circular cylindrical face of radius a, and two vertical plane faces. The curve on the cylindrical face joining the top of the dome to the vertex of the right angle at the base of the triangle is called a *meridian*; it is a quarter of a circle of radius a. The curve on the other edge of the cylindrical face is an ellipse. The circumscribing prism is correspondingly divided into different triangular prisms of altitude a, each having a base congruent to the corresponding right triangular base of the wedge, as shown in Figure 6b. Let T denote the area of a typical triangular base. A horizontal cutting plane at distance x above the base cuts a triangle of area $A(x)$ from the dome and a trapezoid of area $T(x)$ from the punctured prism. It suffices to show that $A(x) = T(x)$.

The area of the trapezoid is equal to T minus the area of a smaller similar triangle of altitude c and similarity ratio c/a, as indicated in Figure 6b. But $c/a = x/a$, so the smaller triangle has area $(x/a)^2T$, hence $T(x) = (1 - (x/a)^2)T$.

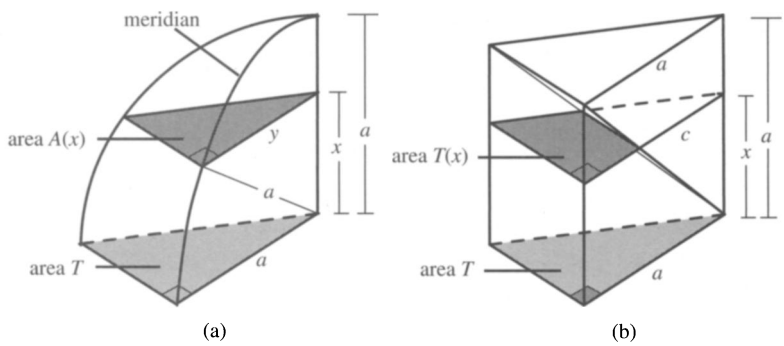

Figure 6. The cross-sectional areas $A(x)$ and $T(x)$ are equal for every x.

Let y be the altitude of the triangular cross section of the wedge in Figure 6a cut by a plane at distance x from the base. This triangle is similar to the triangular base with similarity ratio y/a, so its area is $(y/a)^2T$. But from Figure 6a we have $x^2 + y^2 = a^2$ because the meridian is a circular arc, and therefore $(y/a)^2T = (1 - (x/a)^2)T = T(x)$. In other words, $A(x) = T(x)$, as we set out to prove. This argument gives us:

Theorem 4.

(a) *Corresponding slices of the globe and punctured prism cut by two planes parallel to the equator have equal volumes.*

(b) *The volume of an Archimedean globe is two-thirds the volume of its circumscribing prism.*

When the number of edges of the polygonal base tends to ∞ and the circumscribing equatorial polygon becomes a circle, the Archimedean globe becomes a sphere, and the circumscribing prism becomes a circular cylinder. Thus, Theorem 1 and Corollary 2 are limiting cases of Theorem 4.

EXAMPLES. Archimedean globes can also be constructed by combining wedge-like portions of n semicircular cylinders whose axes are in the equatorial plane and intersect at the center of the inscribed equator, each axis being parallel to an edge of the polygonal base. The two simplest examples ($n = 3$ and $n = 4$) are shown in Figures 7a and 7b. The solid in Figure 7b (usually described as the intersection of two cylinders) has volume two-thirds that of the smallest box that contains it. In his preface to *The Method* [**4**, supplement, p. 12] Archimedes announced that the volume of intersection of two perpendicular cylinders is two-thirds the volume of the circumscribing cube. A globe whose equator is a regular n-gon circumscribing a sphere of radius a has volume $(4/3)na^3 \tan(\pi/n)$, whose limit as $n \to \infty$ is $4\pi a^3/3$, the volume of a sphere of radius a.

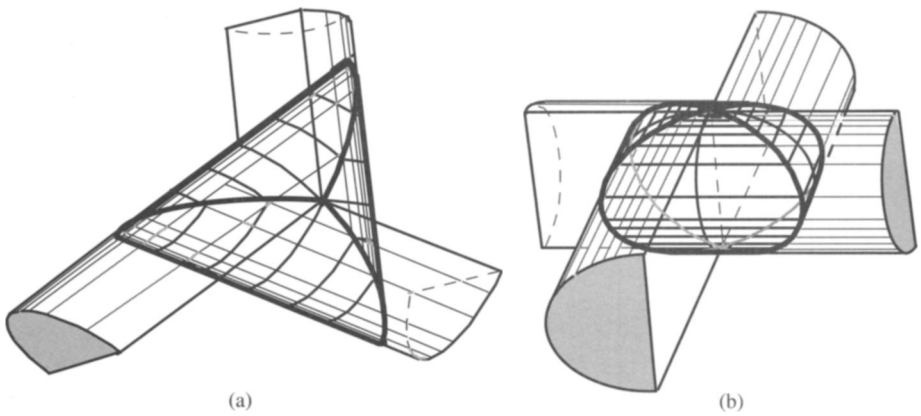

Figure 7. Portions of semicircular cylindrical wedges combined to form Archimedean globes.

The next section analyzes shells, which are analogous to solids constructed from wedge-like portions of cylindrical pipes.

5. VOLUME OF AN ARCHIMEDEAN SHELL. The volume of the shell between two concentric Archimedean domes is, of course, the difference between the volumes of the outer and inner domes. Theorem 4(a) gives parts (a) and (c) of the following theorem:

Theorem 5.

(a) *Corresponding slices of an Archimedean shell and the punctured circumscribing prism cut by two planes parallel to the equator have equal volumes.*

(b) *A slice of an Archimedean shell between parallel planes that cut both domes has volume equal to the corresponding slice of a prismatic shell (of constant thickness) cut by the same planes. This volume is the product of the distance between the cutting planes and the area of the polygonal ring on the base.*

(c) *Corresponding slices of two different Archimedean shells with bases of equal area cut by planes parallel to their common equatorial plane have equal volumes.*

To prove part (b), look at Figure 8a, which shows one wedge cut from two concentric Archimedean domes with radii r and a, where $r < a$. The base of the wedge is a trapezoid of altitude $a - r$. The wedge is intersected by two parallel horizontal planes

that cut *both* domes. Each horizontal cross section is a trapezoid of variable altitude. The corresponding cross sections in Figure 8b are trapezoids of equal area (but with fixed altitude $a - r$), so by Cavalieri's principle the Archimedean shell and prismatic shell have equal volumes.

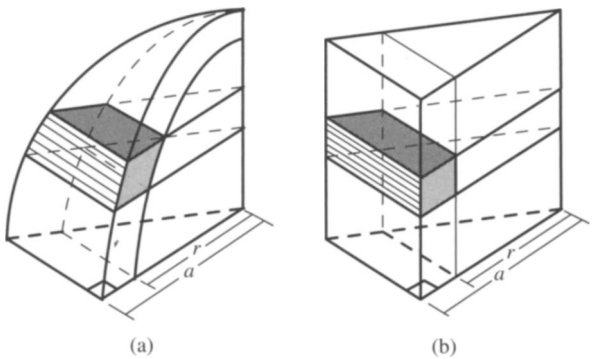

Figure 8. Parallel planes cut the Archimedean shell and the prismatic shell in slices of equal volumes.

6. SURFACE AREA OF AN ARCHIMEDEAN GLOBE. Theorem 5(b) can be used to give a heuristic argument for determining the surface area of an Archimedean globe. Because of symmetry it suffices to treat the upper dome. Figure 9a shows one wedge of a very thin Archimedean shell, with outer base b, outer radius a, and inner radius r, where r is very nearly equal to a. The shell can be unwrapped (Figure 9b) to form a figure that is flat and almost a prism, with its volume equal to the lateral area A of the wedge times its thickness, or $A(a - r)$. We want to determine A.

In proving Theorem 5(b) we found that the volume of a wedge of an Archimedean shell is equal to the volume of a portion of a prismatic shell of thickness $a - r$. This portion, shown in Figure 9c, is very nearly a thin rectangular slab of base b, altitude a, thickness $a - r$, and volume $ba(a - r)$. Equating this to $A(a - r)$ we find $A = ba$. The sum of the lateral areas A of all the slices is equal to the sum of the corresponding products ba which, in turn, is the lateral surface area of the circumscribing prism.

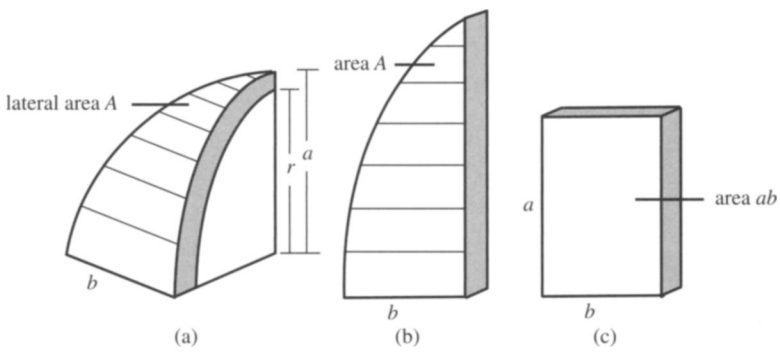

Figure 9. The curved face of a slice of a thin Archimedean shell in (a) unwrapped so that it is flat as in (b). The volume of the shell is very nearly equal to the area of the shell times its thickness. It is also equal to the volume of the rectangular slab in (c) of the same thickness.

The same analysis applies to any portion of the Archimedean shell between two parallel cutting planes. For the limiting case when $r \to a$ we obtain:

Theorem 6.

(a) *The lateral surface area of any slice of an Archimedean globe between two parallel planes is equal to the lateral surface area of the corresponding slice of the circumscribing prism. This area is proportional to the distance between the parallel cutting planes.*

(b) *The total surface area of an Archimedean globe is equal to the lateral surface area of the circumscribing prism.*

This result, discovered by a heuristic argument, can be converted into a rigorous proof by using the method of exhaustion or integration. In the limiting case when the circumscribing prism becomes a circular cylinder, we obtain:

Corollary 7. *The lateral surface area of a spherical slice cut by two parallel planes is equal to the lateral surface area of the corresponding slice of the circumscribing cylinder.*

Using a different approach, Archimedes found the surface area of a sphere [**4**, Proposition 33, p. 39], and the surface area of any segment of a sphere [**4**, Proposition 43, p. 53]. The statement for the segment is particularly elegant because it involves only one parameter, the *slant height* of a cone inscribed in the segment. Proposition 43 states that *the surface area of the segment is equal to that of a circle whose radius is the slant height of the cone inscribed in the segment.* This result holds more generally for the surface area of any segment of an Archimedean dome (the portion of the surface of the dome above a plane parallel to the equatorial plane, as shown in Figure 10).

Theorem 8. *The surface area of any segment of an Archimedean dome is equal to that of a polygon similar to the polygonal base circumscribing a circle whose radius is the slant height of the corresponding inscribed pyramid.*

Proof. By Theorem 6(a), the surface area of a segment of height h is equal to hp, where p is the perimeter of the polygonal base. Let a be the radius of the equator, and let s denote the slant height of the inscribed pyramid (Figure 10a). Then s is the hypotenuse of a right triangle with h as one leg, and s is also one leg of a similar right triangle with hypotenuse $2a$. Therefore $2a/s = s/h$, or $s/a = 2h/s$. But s/a is the similarity ratio of similar polygons circumscribing circles of radii s and a, respectively. The polygon circumscribing the circle of radius s is shown in Figure 10b. If p_s denotes its perimeter, then its area is $sp_s/2$. By similarity, $p_s = (s/a)p = (2h/s)p$, so area $sp_s/2 = hp$, as required. (N.B. The relation $s/a = 2h/s$ for the sphere also proves Proposition 43.) ■

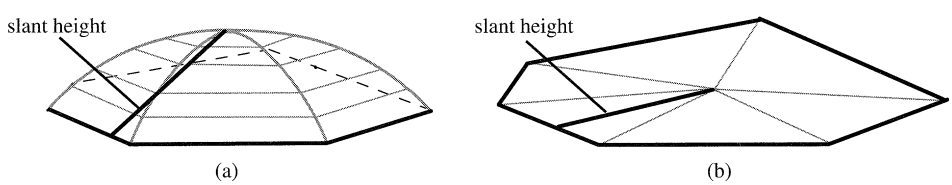

Figure 10. The surface area of a segment of a dome is equal to that of a polygon similar to the base.

Theorem 4(b) states that the volume of an Archimedean globe is two-thirds the volume of the smallest circumscribing prism. Now we prove the companion theorem for surface area:

Theorem 9. *The surface area of an Archimedean globe is two-thirds the total surface area of its circumscribing prism.*

Proof. By Theorem 6(b), the total surface area of an Archimedean globe is equal to the lateral surface area of the smallest circumscribing prism. Therefore to prove Theorem 9 it suffices to show that each polygonal base of the prism has area equal to one-fourth the lateral surface area of the prism. Then the areas of the two bases plus the lateral surface area is three-halves the surface area of the inscribed Archimedean globe.

The lateral surface of the prism can be unwrapped to form a rectangle of area $2ap$, where p is the perimeter of the base and $2a$ is the altitude of the prism. The polygonal base can be divided into right triangles of the type shown in Figure 8b, each with altitude a and area $ab_k/2$, where b_k is the base of the triangle. The sum of the b_k is equal to p, and the area of the polygonal base is $ap/2 = (2ap)/4$, as required. ■

When the polygonal base approaches a circle as a limit we obtain:

Corollary 10 (Archimedes). *The surface area of a sphere is two-thirds the total surface area of its circumscribing cylinder.*

Theorems 4 and 9 provide new proofs and significant generalizations of the landmark discoveries of Archimedes mentioned in the opening sentence of this paper. As already remarked, Archimedes knew that the volume of intersection of two perpendicular cylinders is two-thirds that of the smallest cube that contains it, but apparently he never considered the corresponding surface areas, which by Theorems 4 and 9 are in the same ratio. Finding the volume of two intersecting cylinders has become a standard exercise in calculus texts, but, except for the case of a sphere, we have not seen the corresponding area relation of Theorem 9 discussed in the literature.

We turn next to two surprising consequences of Theorem 6.

7. INCONGRUENT SOLIDS WITH EQUAL VOLUMES AND EQUAL SURFACE AREAS. Figure 11a shows a horizontal slice of an Archimedean shell between two parallel planes that cut both the inner and outer domes. Figure 11b shows the corresponding prismatic slice of the same constant thickness. The surface of each slice consists of four components: (1) an upper horizontal polygonal ring; (2) a lower horizontal polygonal ring; (3) an outer lateral surface; and (4) an inner lateral surface. We now prove:

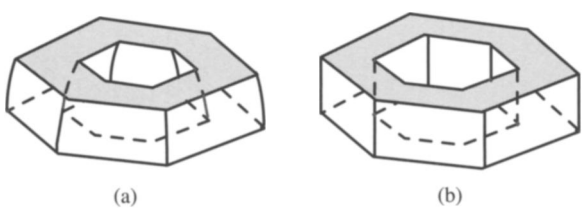

Figure 11. Two incongruent solids of equal volume with corresponding area components of equal areas.

Theorem 11. *The two punctured slices so described have equal volumes, and corresponding components of the surface of each slice have equal areas. Consequently the two slices have equal total surface areas.*

Proof. The volumes are equal by Theorem 5(b). From the analysis leading to Theorem 4, the upper horizontal polygonal rings have equal areas, as do the lower horizontal polygonal rings. By Theorem 6(a), the two outer lateral surface areas are equal, as are the two inner lateral surface areas. ■

Theorem 11 provides several infinite families of pairs of incongruent solids that have equal volumes and equal total surface areas. One family is obtained by varying the number of edges or shape of the equatorial circumscribed polygon, a second by varying the distance between the parallel cutting planes, and a third by varying the distance of one cutting plane from the equatorial plane. Incidentally, the solids in Figure 11 resemble "washers" commonly used, for example, in plumbing fixtures.

8. QUADRATURE OF THE SINE CURVE. The next surprising consequence of Theorem 6 is the *quadrature of the sine curve*. A point on a unit circle that subtends an angle of x radians has rectangular coordinates $(\cos x, \sin x)$. Figure 12a shows this circle as the base of a right circular cylinder from which a wedge has been cut by a plane through a diameter inclined at an angle of 45° with the base. The point on the cutting plane directly above the point $(\cos x, \sin x)$ on the base has altitude $\sin x$. In Figure 12b the lateral surface of the wedge is unwrapped to form a region lying above an interval of length π (half the circumference of the circle), so the upper boundary of the region has Cartesian equation $y = \sin x$.

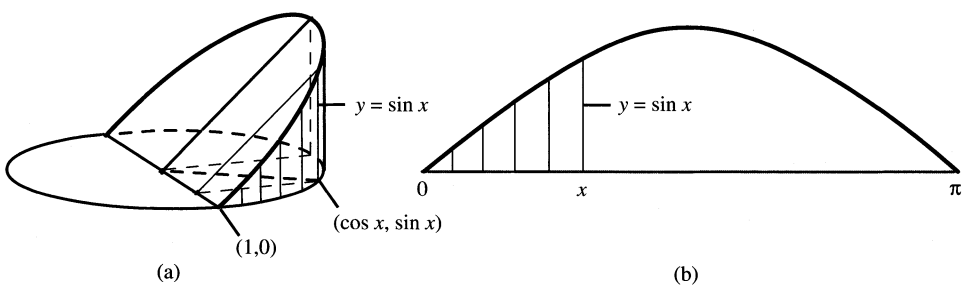

Figure 12. Generating a sine curve by cutting a circular cylinder by an inclined plane through a diameter.

The front half of the wedge in Figure 12a can be regarded as a wedge of an Archimedean dome that has been tipped over so that its circular face is in a horizontal plane with the "top" of the dome at the point with rectangular coordinates $(1, 0)$. The base of the wedge is an isosceles right triangle in a vertical plane. By Theorem 6(a) the lateral surface area of any portion of the wedge cut by a plane parallel to the base of the dome is equal to the area of the corresponding rectangular face cut from a slice of the smallest circumscribing prismatic shell. If the cutting plane is at a distance $\cos x$ from the base of the dome, as shown in Figure 13a, the rectangular face has base 1 and altitude $1 - \cos x$, as shown in Figure 13b. Thus, by elementary geometry, we obtain the quadrature of the sine curve if $0 \le x \le \pi/2$, but, of course, the result holds for all real x.

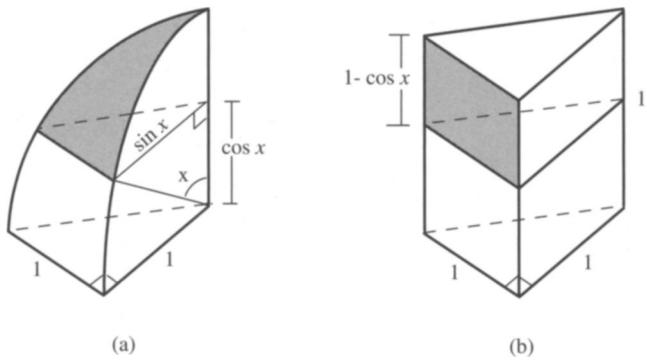

Figure 13. The lateral area of a portion of the dome is equal to that of a rectangular face of the smallest circumscribing prism.

Corollary 12. *The area of the region under the sine curve and above the interval* $[0, x]$ *is equal to that of a rectangle of base* 1 *and altitude* $1 - \cos x$. *In calculus notation,*

$$\int_0^x \sin t\, dt = 1 - \cos x.$$

9. APPLICATIONS TO CENTROIDS. This paper determines the volume of a curved solid in terms of that of a circumscribed punctured prismatic solid whose volume is known or can be easily calculated because it is bounded by plane faces. We cut both solids by horizontal planes that produce cross sections of equal area $A(x)$ at an arbitrary height x above a fixed base. Then we invoke Cavalieri's principle to equate the volumes of the solids cut off between any two horizontal planes. In the language of calculus, the value of the integral $\int_{x_1}^{x_2} A(x)\, dx$ is the volume of the portion of each solid cut by all horizontal planes as x varies over some interval $[x_1, x_2]$. (See Theorem 2.7 of [**1**, vol. 1].) Because the integrand $A(x)$ is the same for both solids, the corresponding volumes are also equal.

Instead of integrating the common cross-sectional area $A(x)$ of two solids to find that their volumes are equal, we could just as well integrate any combination of x and $A(x)$, and the integral over $[x_1, x_2]$ would be the same for both solids. For example, the integral $\int_{x_1}^{x_2} xA(x)\, dx$ is the first moment of the area function $A(x)$ over $[x_1, x_2]$, and this integral divided by the integral $\int_{x_1}^{x_2} A(x)\, dx$ gives the altitude of the *centroid* of the slice of each solid between the planes $x = x_1$ and $x = x_2$. Thus, not only are the volumes of these slices equal, but also the altitudes of their centroids are equal. Moreover, all moments $\int_{x_1}^{x_2} x^k A(x)\, dx$ with respect to the plane of the base are equal for both slices. In other words, we have:

Theorem 13. *With respect to the equatorial plane, all moments of corresponding slices of an Archimedean shell and its circumscribing punctured prismatic shell are equal.*

We conclude this section with some examples of centroids that can be determined using Theorem 13. Consider a shell between two concentric Archimedean domes with radii r and a, where $r < a$. Theorem 13 enables us to locate the centroid of any portion of the shell between two planes parallel to the base that cut both domes. The corresponding slice of a prismatic shell of constant thickness cut by the same planes has its centroid located midway between the two parallel planes. Therefore this is also the height of the centroid of the slice. Hence we have:

Theorem 14. *The centroid of any slice of an Archimedean shell between two horizontal planes that cut both domes lies midway between the two planes on the altitude through the common center. In particular, the slice of the shell between the equatorial plane and the plane whose distance from the center is the radius r of the inner dome has its centroid at a distance $r/2$ above the equator.*

In the limiting case when $r \to a$ (so the thickness of the shell tends to 0), we find the following corollary of Theorem 14:

Corollary 15. *The centroid of the surface of an Archimedean dome is at the midpoint of its altitude.*

In the limiting case when the circumscribing equatorial polygon becomes a circle, this yields a known result for a hemisphere that can be found using surface integrals (see [**1**, vol. 2, p. 431]). The same limiting case of Theorem 14 gives:

Corollary 16. *The centroid of the surface of any slice of a sphere (in particular, of a segment) is midway between the two parallel cutting planes.*

Applications of the results of this paper, especially to certain nonuniform solids for which Archimedes' mechanical method does not apply, will be discussed elsewhere.

10. THE ARCHIMEDES PALIMPSEST. Our knowledge of the works of Archimedes comes from Heath's treatment [**4**], first published in 1897 and reissued in 1912 with a supplement entitled *The Method*, a newly discovered work addressed to Eratosthenes that records Archimedes' thoughts about how he came upon many of his results mechanically. The work of Archimedes has recently acquired a certain degree of notoriety in the public media because of an intriguing story regarding the *Archimedes Palimpsest*, the oldest known surviving copy of *The Method*. The story is well documented in [**3**] and [**6**], beginning with the conversion of a copy of the Archimedes manuscript into a palimpsest in the twelfth century, and ending with its sudden reappearance and sale at auction in 1998. An anonymous buyer deposited the manuscript in the Walters Art Gallery in Baltimore for study and restoration. Progress made in reconstructing the text is described in an interview [**2**] with the curator of the Walters Art Gallery and several international scholars. Apparently, the final chapter of this story is yet to be written.

Note: Computer animated versions of parts of this paper can be viewed online at http://www.its.caltech.edu/~mamikon/globes.html

REFERENCES

1. T. M. Apostol, *Calculus*, vols. 1 and 2, 2nd ed., John Wiley & Sons, New York, 1967 and 1969.
2. Archimedes' Secret, transcript of the BBC television program *Horizon* broadcast 14 March 2002; available online at http://www.bbc.co.uk/science/horizon.2001/archimedestrans.shtml
3. J. Gray, Sale of the century? *Math. Intelligencer* **21** (3) (1999) 12–15.
4. T. L. Heath, *The Works of Archimedes*, Dover, New York, 1953.
5. M. Mamikon, *Kvant* **5** (1977) 10–13, and (1978) 11–17 (Russian).
6. S. Stein, *Archimedes, What Did He Do Besides Cry Eureka?*, Mathematical Association of America, Washington, D.C., 1999.

TOM M. APOSTOL joined the Caltech mathematics faculty in 1950 and became professor emeritus in 1992. He is director of Project MATHEMATICS! (http://www.projectmathematics.com) an award-winning series of

videos he initiated in 1987. His long career in mathematics is described in the September 1997 issue of *The College Mathematics Journal*. He is currently working with colleague Mamikon Mnatsakanian to produce materials demonstrating Mamikon's innovative and exciting approach to mathematics.

California Institute of Technology, 1-70 Caltech, Pasadena, CA 91125
apostol@caltech.edu

MAMIKON A. MNATSAKANIAN received a Ph.D. in physics in 1969 from Yerevan University, where he became professor of astrophysics. As an undergraduate he began developing innovative geometric methods for solving many calculus problems by a dynamic and visual approach that makes no use of formulas. He is currently working with Tom Apostol under the auspices of Project MATHEMATICS! to present his methods in a multimedia format.

California Institute of Technology, 1-70 Caltech, Pasadena, CA 91125
mamikon@caltech.edu

Falling in Love

Like any learner I am slow.
No matter how long it takes to say something
there is a pause before it is true.

Like any learner I am afraid.
Points are blinking, lines are shimmering
and I cannot yet touch.

Like any learner I am stupid.
Like any learner I am tired.

Like any mathematician I have to sleep on it.
Go through my days, my weeks on it.
I cannot be given.
I must first prove.

Like any neighborhood this is not a point.
It's bigger than epsilon
bigger than delta
bigger, even, than one.

——Submitted by Marion D. Cohen, "Meeting Alhambra," Proceedings of the 2003 ISAMA/Bridges Joint Meeting, University of Granada, Spain, pp. 485–492